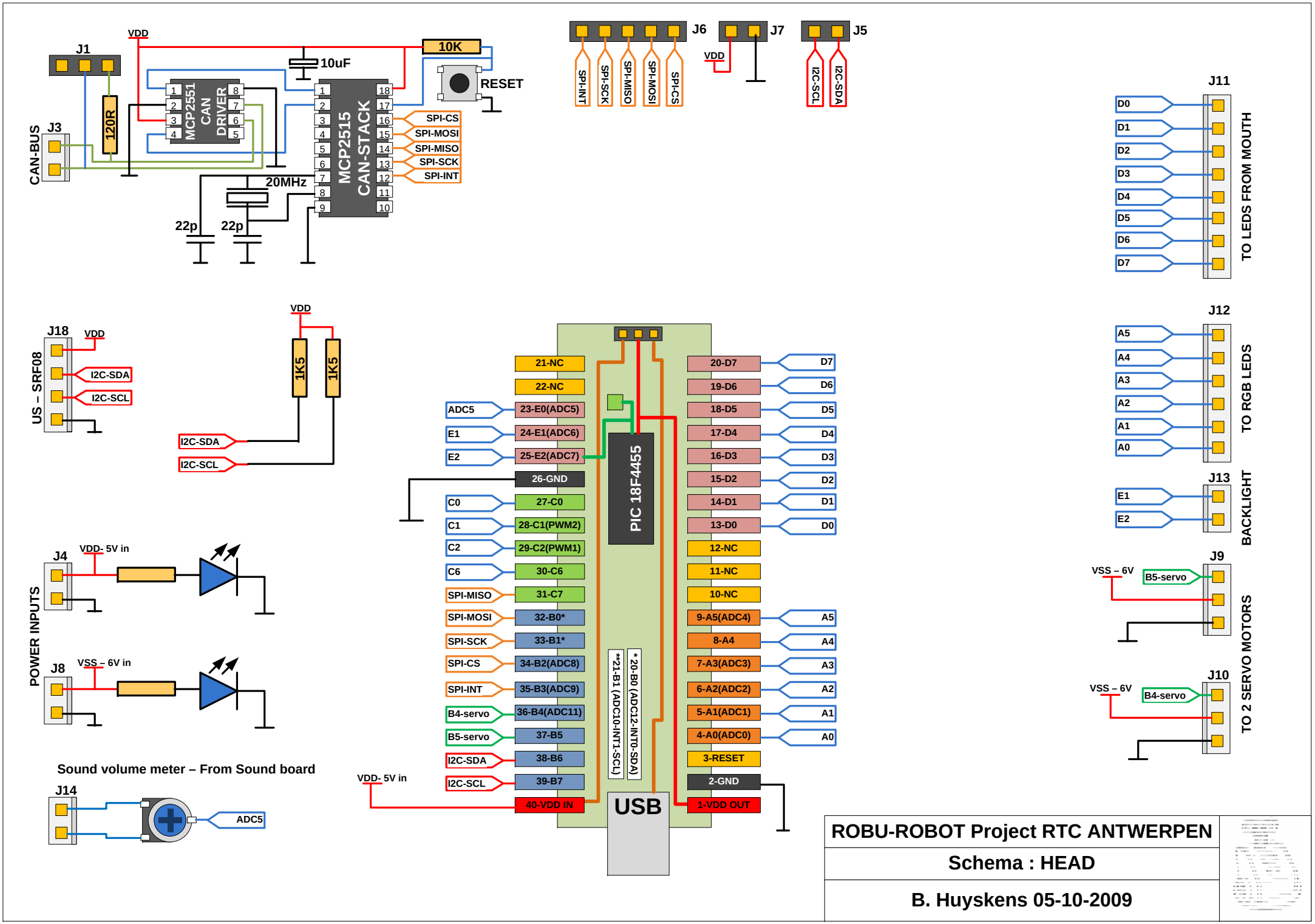
J1
VDD
10uF
10K
RESET
J3
CAN-BUS
120R
MCP2551 CAN DRIVER
MCP2515 CAN-STACK
SPI-CS
SPI-MOSI
SPI-MISO
SPI-SCK
SPI-INT
20MHz
22p
22p
J6
J7
J5
SPI-INT
SPI-SCK
SPI-MISO
SPI-MOSI
SPI-CS
VDD
I2C-SCL
I2C-SDA
J11
D0
D1
D2
D3
D4
D5
D6
D7
TO LEDS FROM MOUTH
J18
VDD
I2C-SDA
I2C-SCL
US – SRF08
VDD
1K5
1K5
I2C-SDA
I2C-SCL
PIC 18F4455
21-NC
22-NC
23-E0(ADC5)
24-E1(ADC6)
25-E2(ADC7)
26-GND
27-C0
28-C1(PWM2)
29-C2(PWM1)
30-C6
31-C7
32-B0*
33-B1*
34-B2(ADC8)
35-B3(ADC9)
36-B4(ADC11)
37-B5
38-B6
39-B7
40-VDD IN
20-D7
19-D6
18-D5
17-D4
16-D3
15-D2
14-D1
13-D0
12-NC
11-NC
10-NC
9-A5(ADC4)
8-A4
7-A3(ADC3)
6-A2(ADC2)
5-A1(ADC1)
4-A0(ADC0)
3-RESET
2-GND
1-VDD OUT
ADC5
E1
E2
C0
C1
C2
C6
SPI-MISO
SPI-MOSI
SPI-SCK
SPI-CS
SPI-INT
B4-servo
B5-servo
I2C-SDA
I2C-SCL
VDD- 5V in
D7
D6
D5
D4
D3
D2
D1
D0
A5
A4
A3
A2
A1
A0
**21-B1 (ADC10-INT1-SCL)
* 20-B0 (ADC12-INT0-SDA)
USB
J12
A5
A4
A3
A2
A1
A0
TO RGB LEDS
J13
E1
E2
BACKLIGHT
J9
VSS – 6V
B5-servo
J10
VSS – 6V
B4-servo
TO 2 SERVO MOTORS
POWER INPUTS
J4
VDD- 5V in
J8
VSS – 6V in
Sound volume meter – From Sound board
J14
ADC5
ROBU-ROBOT Project RTC ANTWERPEN
Schema : HEAD
B. Huyskens 05-10-2009