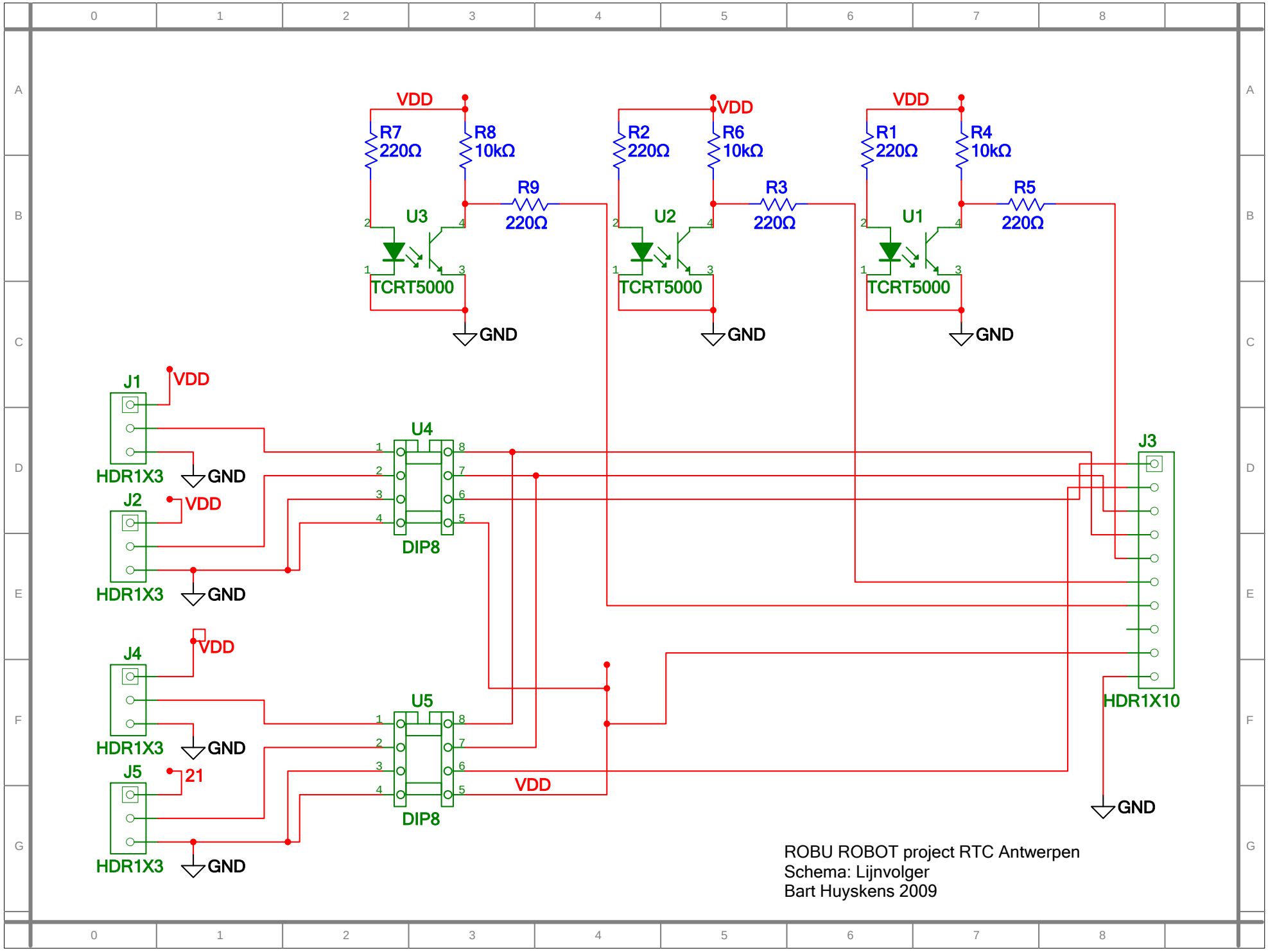
VDD
R7
220Ω
R8
10kΩ
R9
220Ω
U3
TCRT5000
GND
R2
220Ω
R6
10kΩ
R3
220Ω
U2
TCRT5000
R1
220Ω
R4
10kΩ
R5
220Ω
U1
TCRT5000
J1
HDR1X3
J2
HDR1X3
J4
HDR1X3
J5
HDR1X3
21
U4
DIP8
U5
DIP8
J3
HDR1X10
ROBU ROBOT project RTC Antwerpen
Schema: Lijnvolger
Bart Huyskens 2009