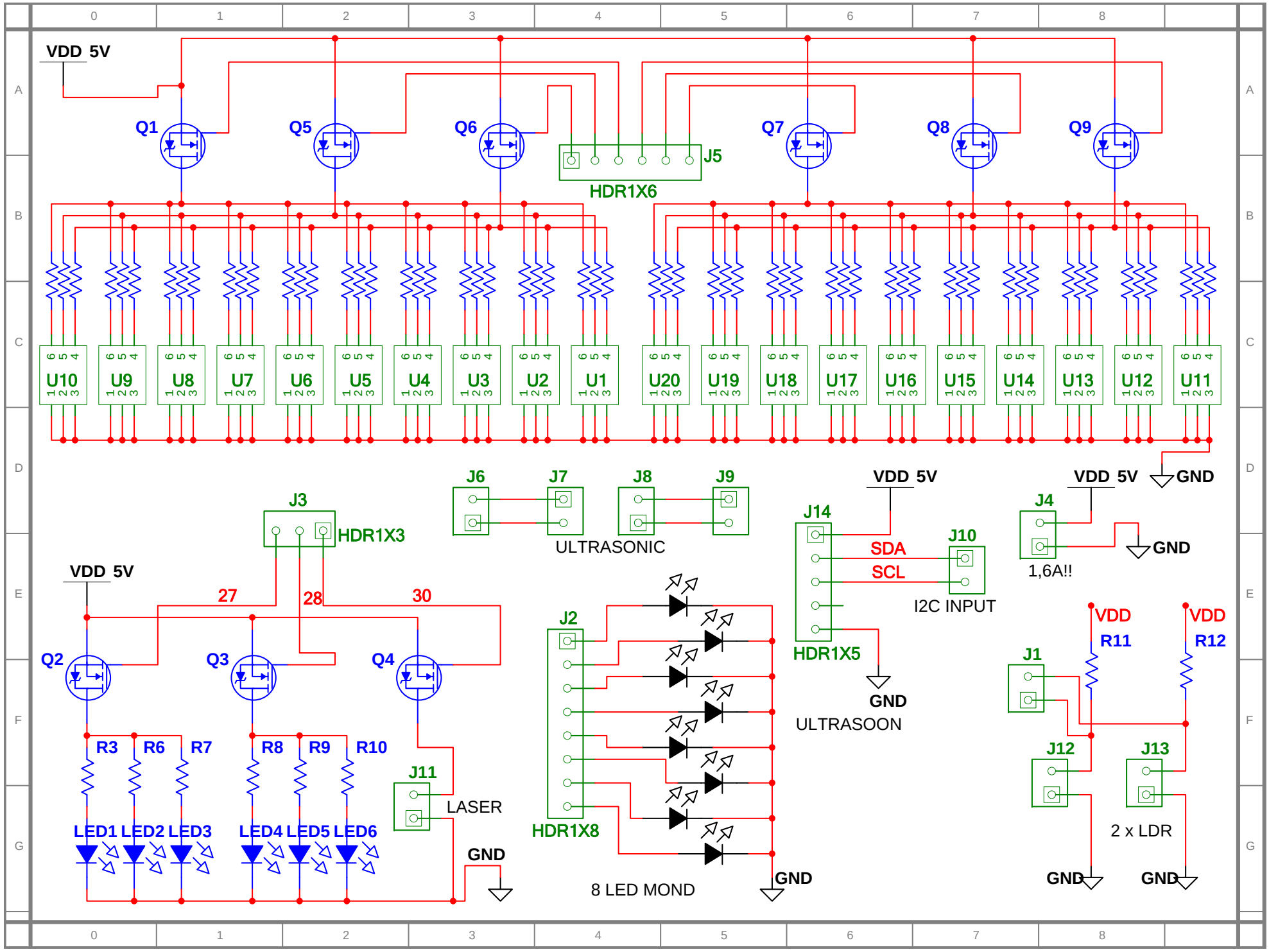
VDD 5V
Q1
Q5
Q6
Q7
Q8
Q9
J5
HDR1X6
U10
U9
U8
U7
U6
U5
U4
U3
U2
U1
U20
U19
U18
U17
U16
U15
U14
U13
U12
U11
J6
J7
J8
J9
ULTRASONIC
J3
HDR1X3
VDD 5V
27
28
30
Q2
Q3
Q4
R3
R6
R7
R8
R9
R10
LED1
LED2
LED3
LED4
LED5
LED6
J11
LASER
GND
J2
HDR1X8
8 LED MOND
GND
VDD 5V
J14
SDA
SCL
J10
I2C INPUT
HDR1X5
GND
ULTRASOON
VDD 5V
GND
J4
GND
1,6A!!
VDD
R11
VDD
R12
J1
J12
J13
2 x LDR
GND
GND