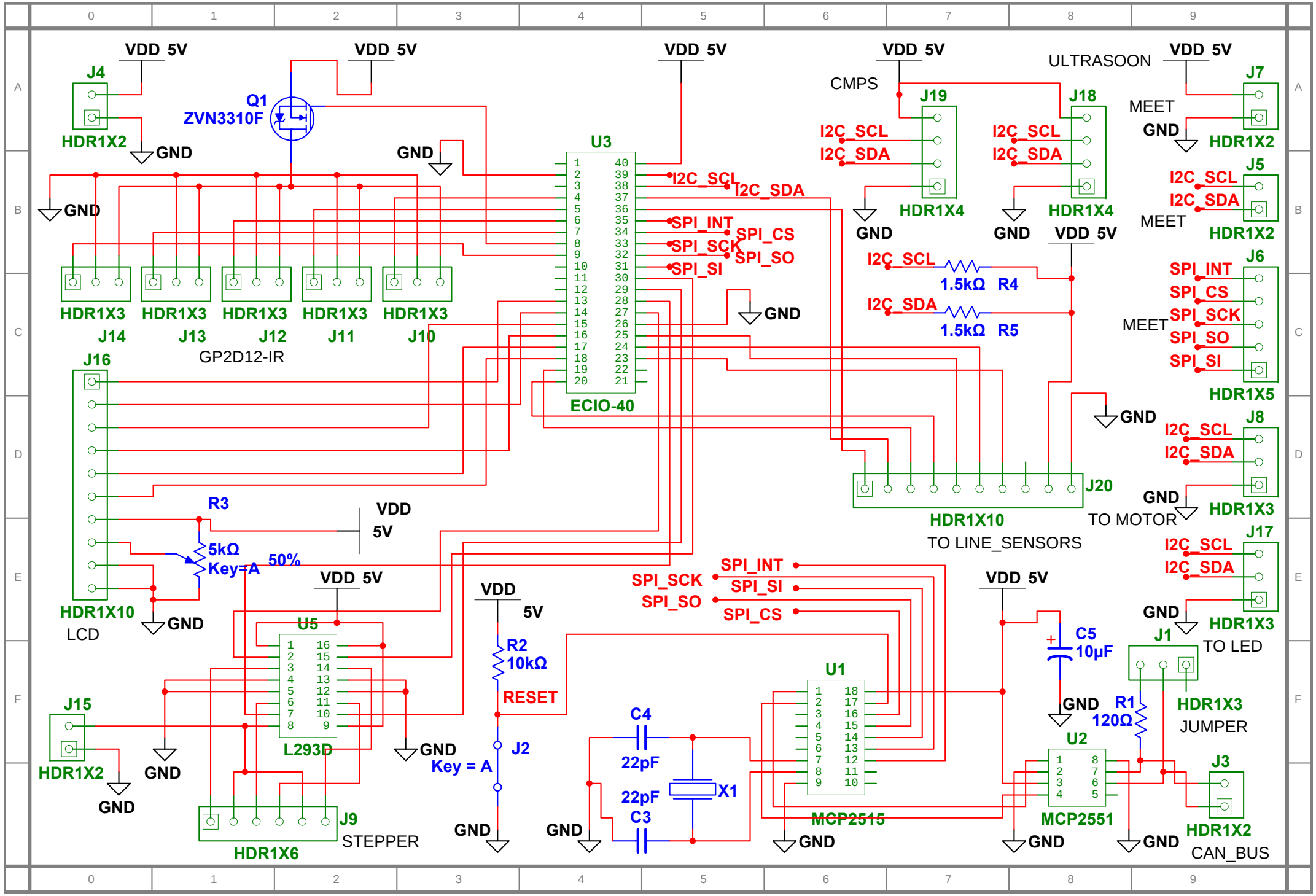
VDD 5V
J4
HDR1X2
GND
Q1
ZVN3310F
U3
ECIO-40
I2C_SCL
I2C_SDA
SPI_INT
SPI_CS
SPI_SCK
SPI_SO
SPI_SI
CMPS
J19
HDR1X4
J18
ULTRASOON
MEET
J7
J5
J6
HDR1X5
J8
HDR1X3
J17
J1
TO LED
JUMPER
R4
1.5kΩ
R5
J20
HDR1X10
TO LINE_SENSORS
TO MOTOR
HDR1X3
J14
J13
J12
J11
J10
GP2D12-IR
J16
HDR1X10
LCD
R3
5kΩ
Key=A
50%
VDD
5V
U5
L293D
J15
HDR1X2
J9
HDR1X6
STEPPER
R2
10kΩ
RESET
J2
Key = A
C4
22pF
C3
22pF
X1
U1
MCP2515
C5
10µF
R1
120Ω
U2
MCP2551
J3
HDR1X2
CAN_BUS