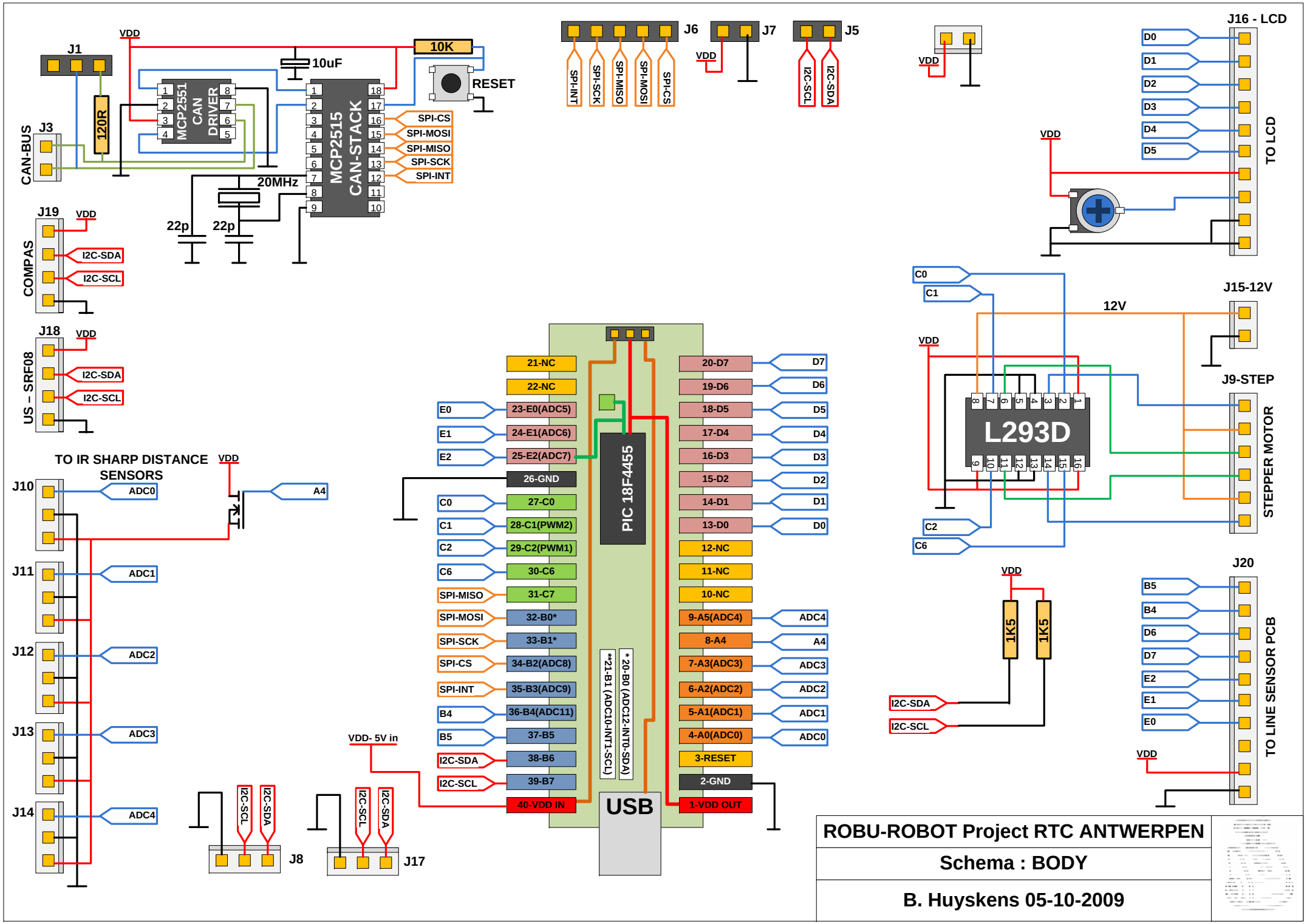
J1
VDD
10uF
10K
RESET
MCP2551 CAN DRIVER
MCP2515 CAN-STACK
120R
CAN-BUS
J3
20MHz
22p
22p
SPI-CS
SPI-MOSI
SPI-MISO
SPI-SCK
SPI-INT
J6
J7
J5
I2C-SCL
I2C-SDA
J16 - LCD
D0
D1
D2
D3
D4
D5
TO LCD
J19
COMPAS
J18
US – SRF08
TO IR SHARP DISTANCE SENSORS
J10
J11
J12
J13
J14
ADC0
ADC1
ADC2
ADC3
ADC4
A4
PIC 18F4455
USB
VDD- 5V in
J8
J17
C0
C1
C2
C6
12V
J15-12V
J9-STEP
L293D
STEPPER MOTOR
1K5
1K5
J20
B5
B4
D6
D7
E2
E1
E0
TO LINE SENSOR PCB
ROBU-ROBOT Project RTC ANTWERPEN
Schema : BODY
B. Huyskens 05-10-2009