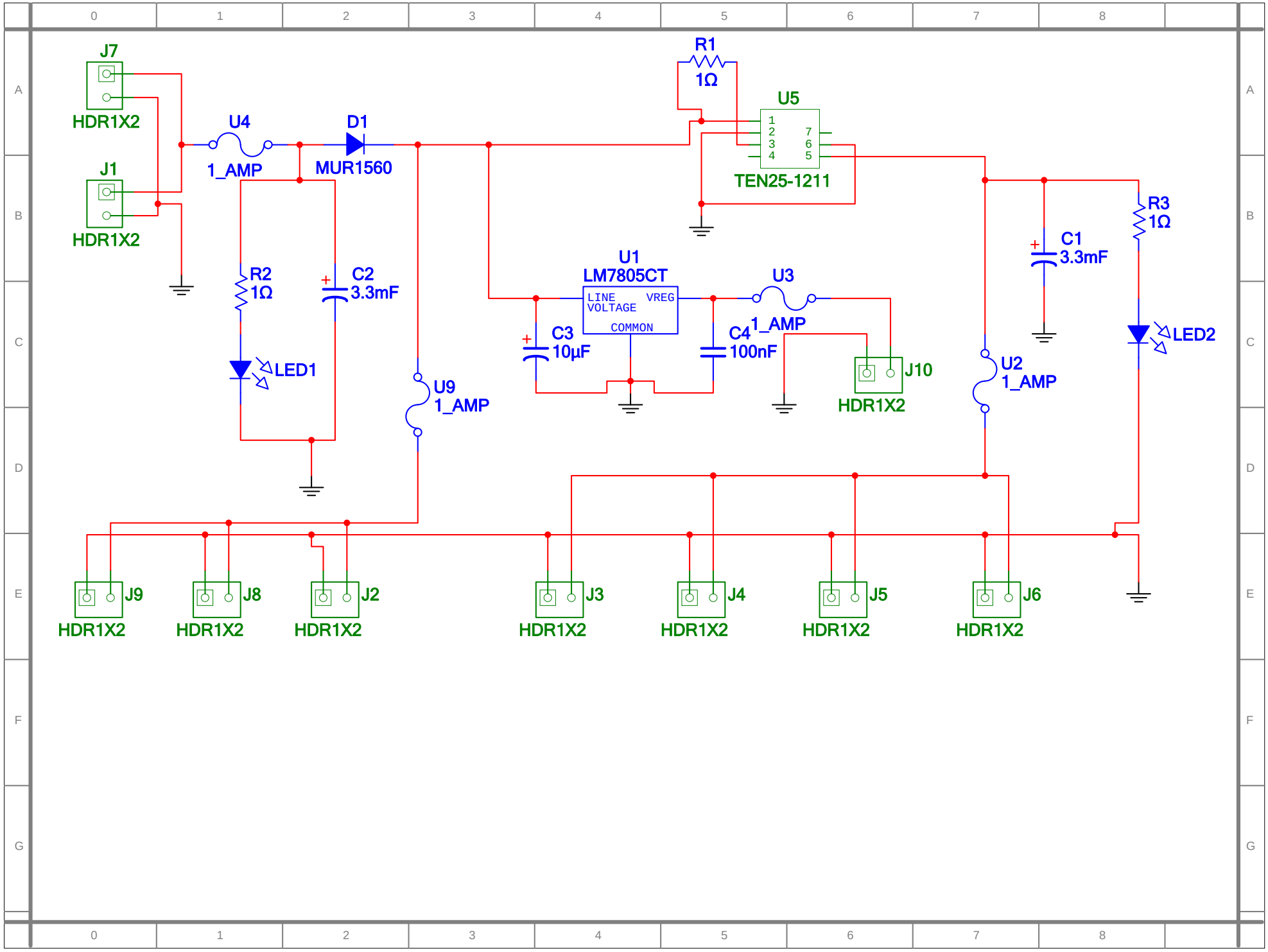
J7
HDR1X2
J1
HDR1X2
U4
1_AMP
D1
MUR1560
R1
1Ω
U5
TEN25-1211
R2
1Ω
C2
3.3mF
LED1
U9
1_AMP
U1
LM7805CT
LINE VOLTAGE
VREG
COMMON
C3
10µF
C4
100nF
U3
1_AMP
J10
HDR1X2
U2
1_AMP
C1
3.3mF
R3
1Ω
LED2
J9
HDR1X2
J8
HDR1X2
J2
HDR1X2
J3
HDR1X2
J4
HDR1X2
J5
HDR1X2
J6
HDR1X2