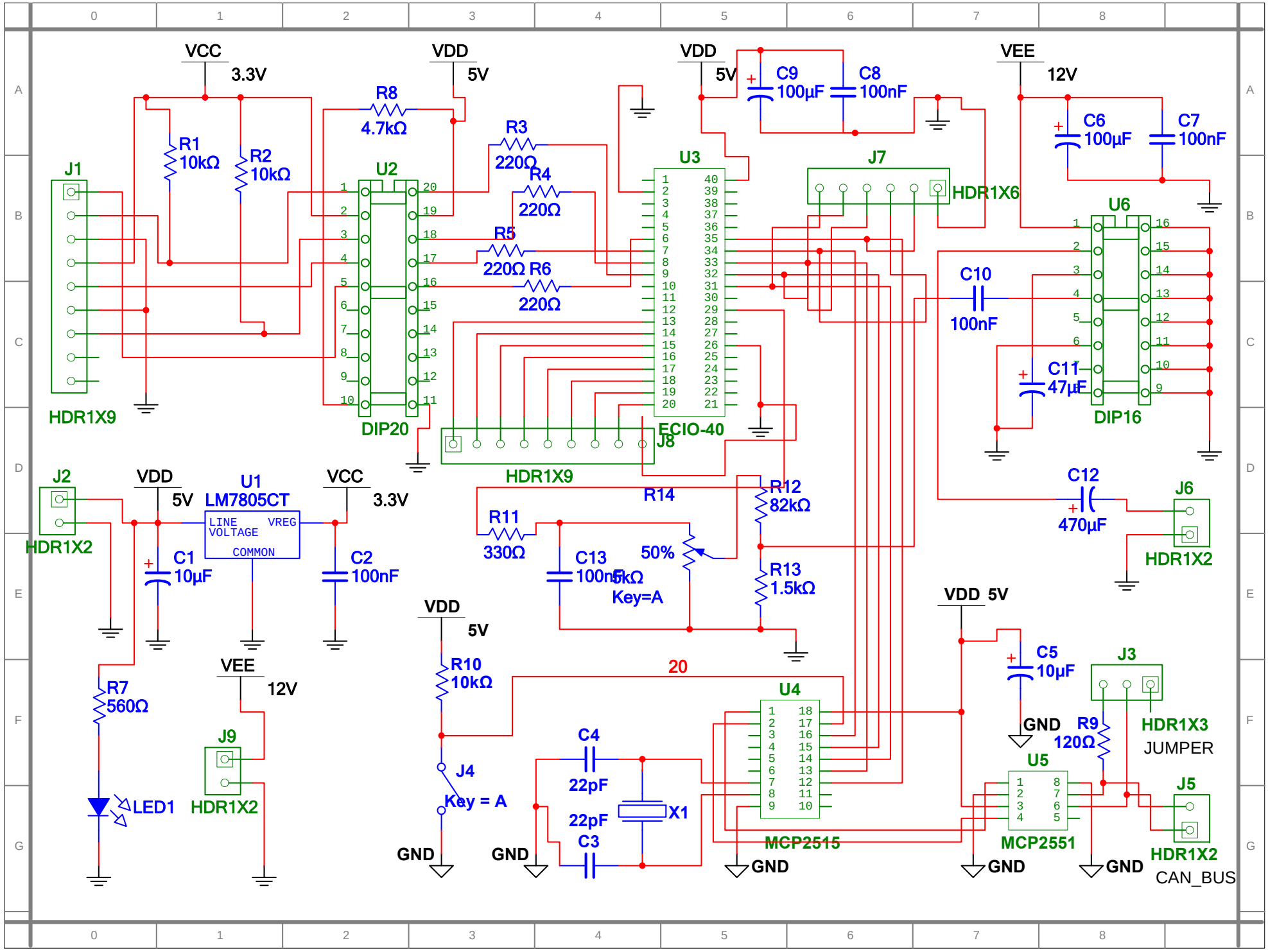
VCC
3.3V
VDD
5V
VDD
5V
VEE
12V
R8
4.7kΩ
R1
10kΩ
R2
10kΩ
R3
220Ω
R4
220Ω
R5
220Ω
R6
220Ω
C9
100µF
C8
100nF
C6
100µF
C7
100nF
J1
HDR1X9
U2
DIP20
U3
ECIO-40
J7
HDR1X6
U6
DIP16
C10
100nF
C11
47µF
J8
HDR1X9
J2
HDR1X2
VDD
5V
U1
LM7805CT
LINE VOLTAGE
VREG
COMMON
VCC
3.3V
C1
10µF
C2
100nF
R14
R12
82kΩ
R11
330Ω
C13
100nF
50%
5kΩ
Key=A
R13
1.5kΩ
C12
470µF
J6
HDR1X2
VDD
5V
R10
10kΩ
20
J4
Key = A
GND
GND
C4
22pF
22pF
C3
X1
U4
MCP2515
GND
VDD 5V
C5
10µF
GND
R9
120Ω
J3
HDR1X3
JUMPER
U5
MCP2551
J5
HDR1X2
CAN_BUS
GND
GND
R7
560Ω
LED1
VEE
12V
J9
HDR1X2