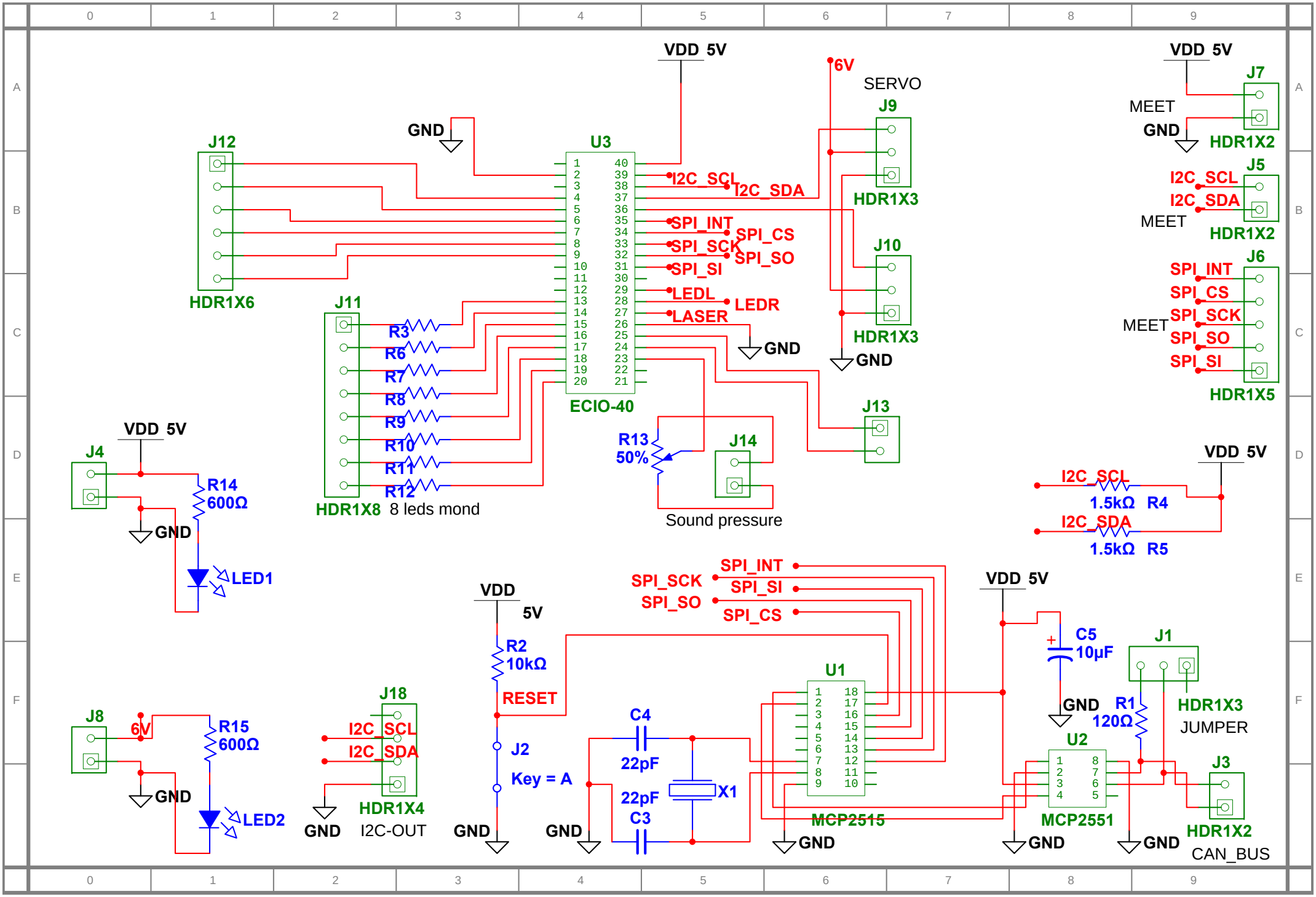
VDD 5V
6V
SERVO
J9
HDR1X3
J10
HDR1X3
GND
J12
HDR1X6
U3
ECIO-40
I2C_SCL
I2C_SDA
SPI_INT
SPI_CS
SPI_SCK
SPI_SO
SPI_SI
LEDL
LEDR
LASER
J11
HDR1X8
8 leds mond
R3
R6
R7
R8
R9
R10
R11
R12
R13
50%
J14
Sound pressure
J13
J7
MEET
HDR1X2
J5
HDR1X2
J6
HDR1X5
J4
R14
600Ω
LED1
I2C_SCL
I2C_SDA
1.5kΩ R4
1.5kΩ R5
J8
R15
600Ω
LED2
J18
HDR1X4
I2C-OUT
VDD
5V
R2
10kΩ
RESET
J2
Key = A
C4
22pF
C3
22pF
X1
U1
MCP2515
C5
10µF
J1
HDR1X3
JUMPER
R1
120Ω
U2
MCP2551
J3
HDR1X2
CAN_BUS