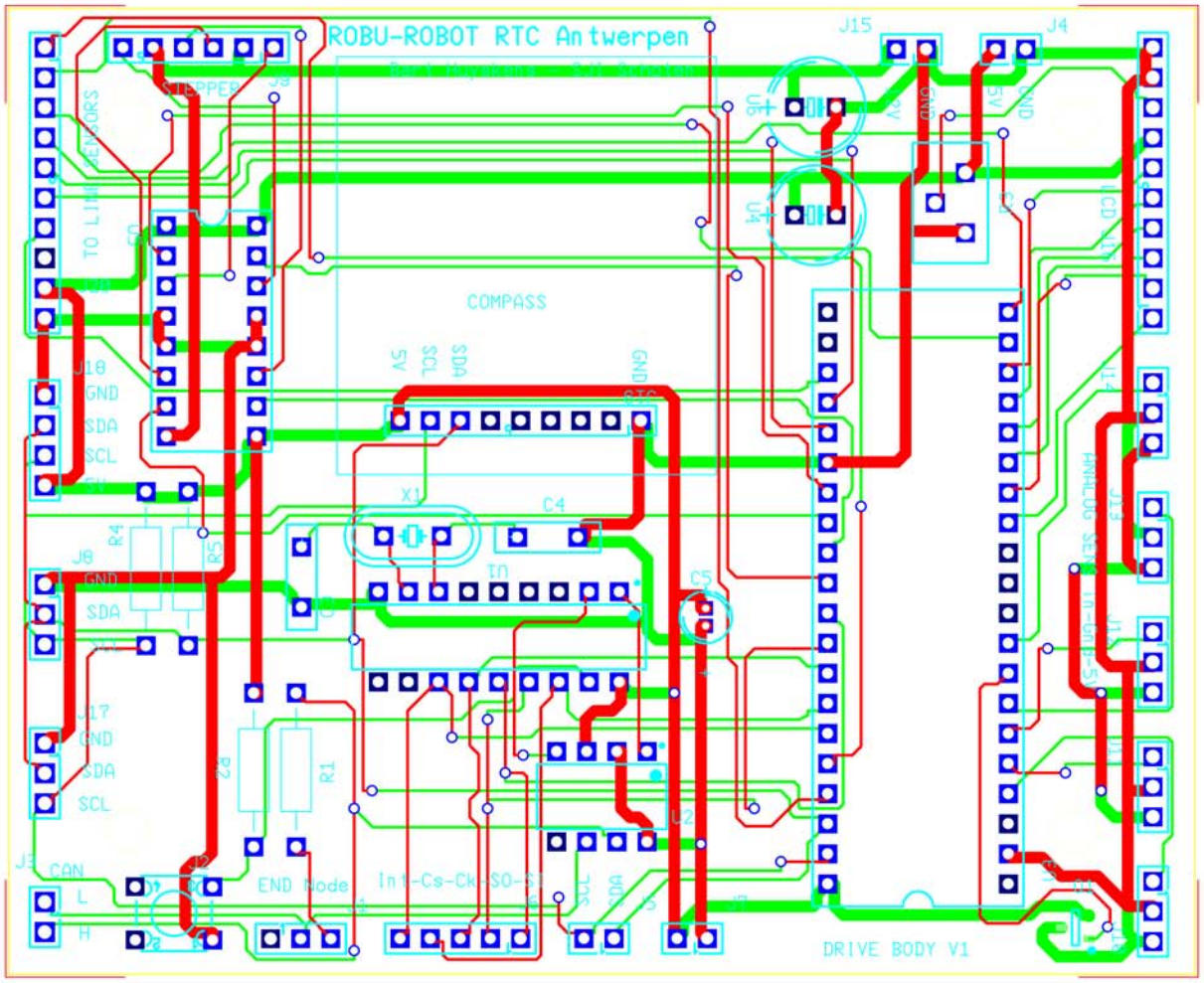
ROBU-ROBOT RTC Antwerpen
J15
J4
STEPPER
J9
TO LINE SENSORS
COMPASS
5V
SCL
SDA
GND
J18
GND
SDA
SCL
X1
C4
U1
C5
J8
GND
SDA
J17
GND
SDA
SCL
R4
R5
R2
R1
END Node
Int-Cs-Ck-SO-SI
CAN
L
H
LCD
ANALOG SENSOR
DRIVE BODY V1